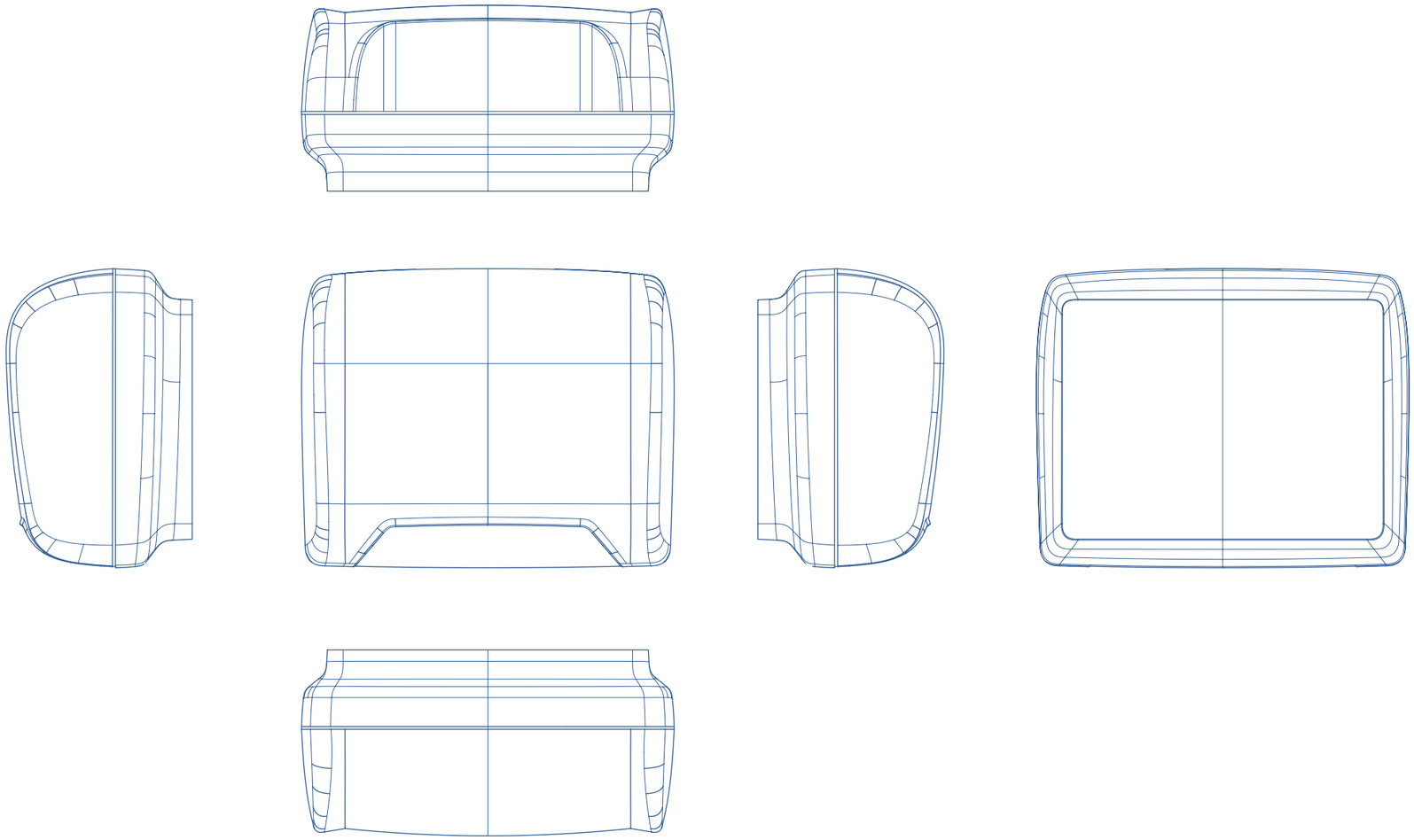

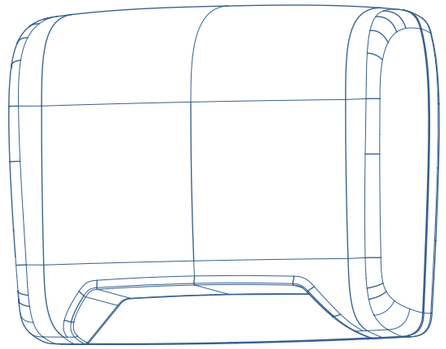

version	modification by CAD only	date	changed

2. component	material:	volume [cm³]: ---	colour:	weight [g]: ---
hagleitner CAD Siemens NX	material:	re-granulate: ---	colour:	weight [g]: ---
	product release according to VDA2 missing dimensions on 3D-data	item number:		volume [cm³]: ---
intellectual property of: Hagleitner Hygiene Internat. GmbH 5700 Zell am See, Lunastr. 5	general tolerance: machine constructions: ISO 2768-f; plastic parts: DIN 16901; stamped parts: DIN 6930-f; impact extrusion parts: DIN 17673	part name: LUNA 2.0_Planerdaten ---		

all rights reserved by ISO 16016

	name	date
drawn	KORO	24.Mar.2015
checked	WEAL	08.Apr.2015
approval	HACH	20.Apr.2015

status: RELEASED

scale: 1:2

part number: E00000768 | A | A3

part name old: